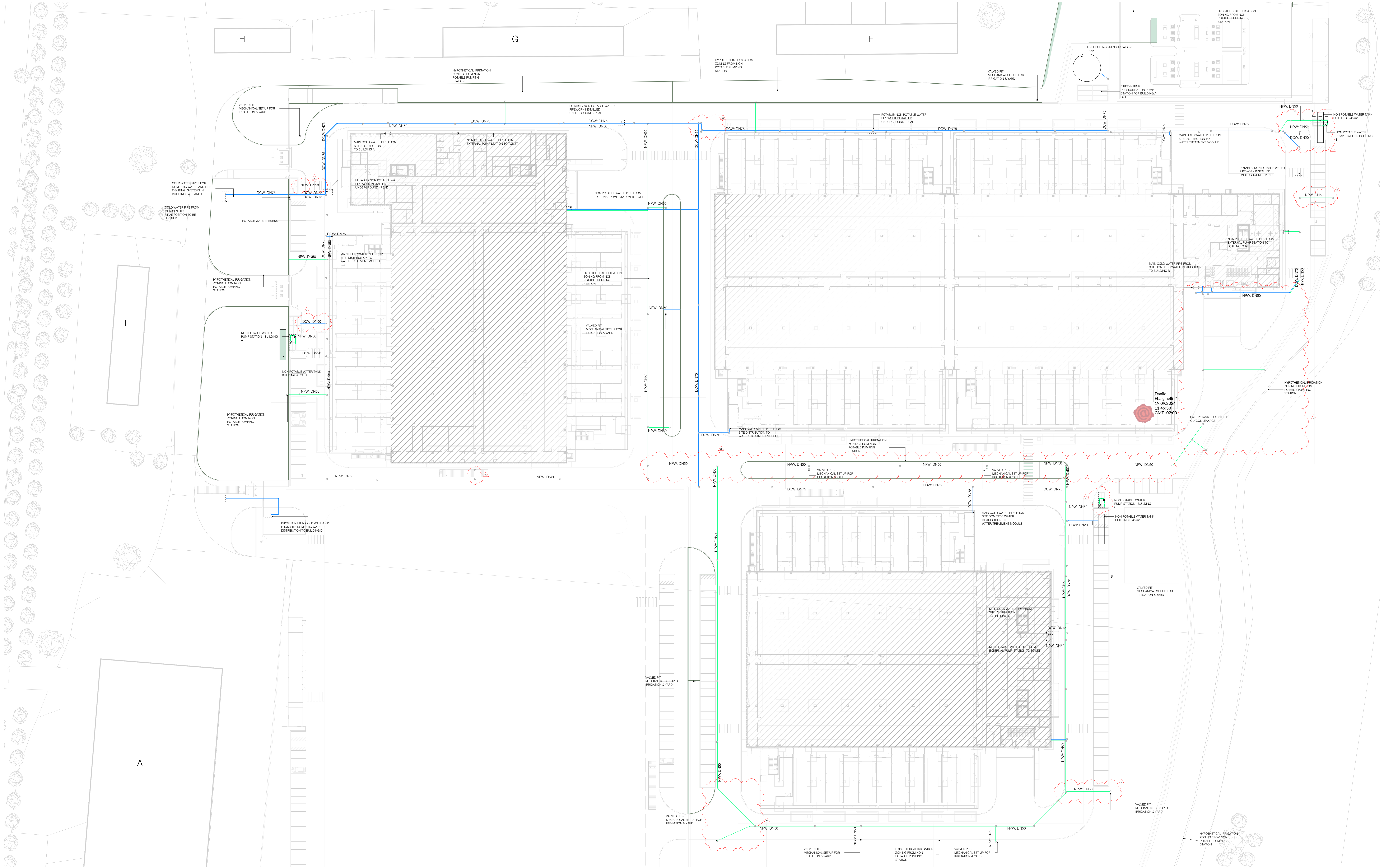
H
G
F
I
A
HYPOTHETICAL IRRIGATION ZONING FROM NON POTABLE PUMPING STATION
VALVED PIT - MECHANICAL SET UP FOR IRRIGATION & YARD
POTABLE/ NON POTABLE WATER PIPEWORK INSTALLED UNDERGROUND - PEAD
DCW: DN75
NPW: DN50
MAIN COLD WATER PIPE FROM SITE DISTRIBUTION TO BUILDING A
NON POTABLE WATER PIPE FROM EXTERNAL PUMP STATION TO TOILET
COLD WATER PIPES FOR DOMESTIC WATER AND FIRE FIGHTING SYSTEMS IN BUILDINGS A, B AND C
COLD WATER PIPE FROM MUNICIPALITY. FINAL POSITION TO BE DEFINED.
POTABLE WATER RECESS
MAIN COLD WATER PIPE FROM SITE DISTRIBUTION TO WATER TREATMENT MODULE
DCW: DN50
NON POTABLE WATER PUMP STATION - BUILDING A
NON POTABLE WATER TANK BUILDING A 45 m³
DCW: DN20
PROVISION MAIN COLD WATER PIPE FROM SITE DOMESTIC WATER DISTRIBUTION TO BUILDING D
FIREFIGHTING PRESSURIZATION TANK
FIREFIGHTING PRESSURIZATION PUMP STATION FOR BUILDING A-B-C
NON POTABLE WATER TANK BUILDING B 45 m³
NON POTABLE WATER PUMP STATION - BUILDING B
NON POTABLE WATER PIPE FROM EXTERNAL PUMP STATION TO LOADING ZONE
MAIN COLD WATER PIPE FROM SITE DOMESTIC WATER DISTRIBUTION TO BUILDING B
SAFETY TANK FOR CHILLER GLYCOL LEAKAGE
Danilo Ebalginelli 19.09.2024 11:49:38 GMT+02:00
MAIN COLD WATER PIPE FROM SITE DOMESTIC WATER DISTRIBUTION TO WATER TREATMENT MODULE
NON POTABLE WATER PUMP STATION - BUILDING C
NON POTABLE WATER TANK BUILDING C 45 m³
MAIN COLD WATER PIPE FROM SITE DISTRIBUTION TO BUILDING C
a

Sanitary and water recovery systems - External Area
1 : 350

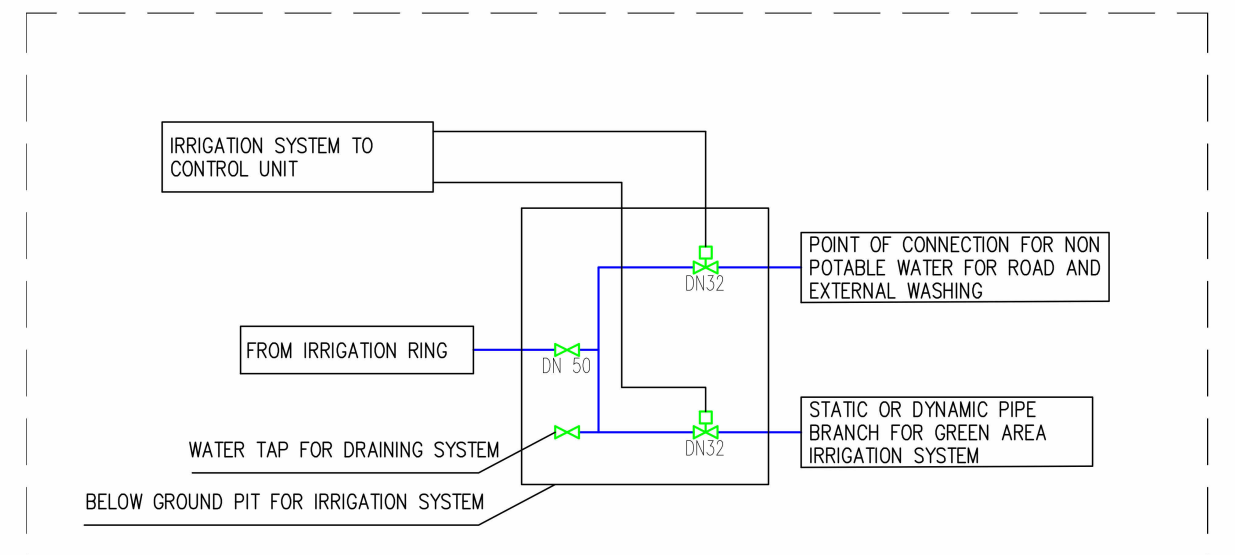
IRRIGATION SYSTEM TO CONTROL UNIT
POINT OF CONNECTION FOR NON POTABLE WATER FOR ROAD AND EXTERNAL WASHING
FROM IRRIGATION RING
DN 50
DN32
WATER TAP FOR DRAINING SYSTEM
STATIC OR DYNAMIC PIPE BRANCH FOR GREEN AREA IRRIGATION SYSTEM
BELOW GROUND PIT FOR IRRIGATION SYSTEM

IRRIGATION FEEDING SCHEMATIC WITH STATIC & DYNAMIC IRRIGATORS

POTABLE WATER RECESS

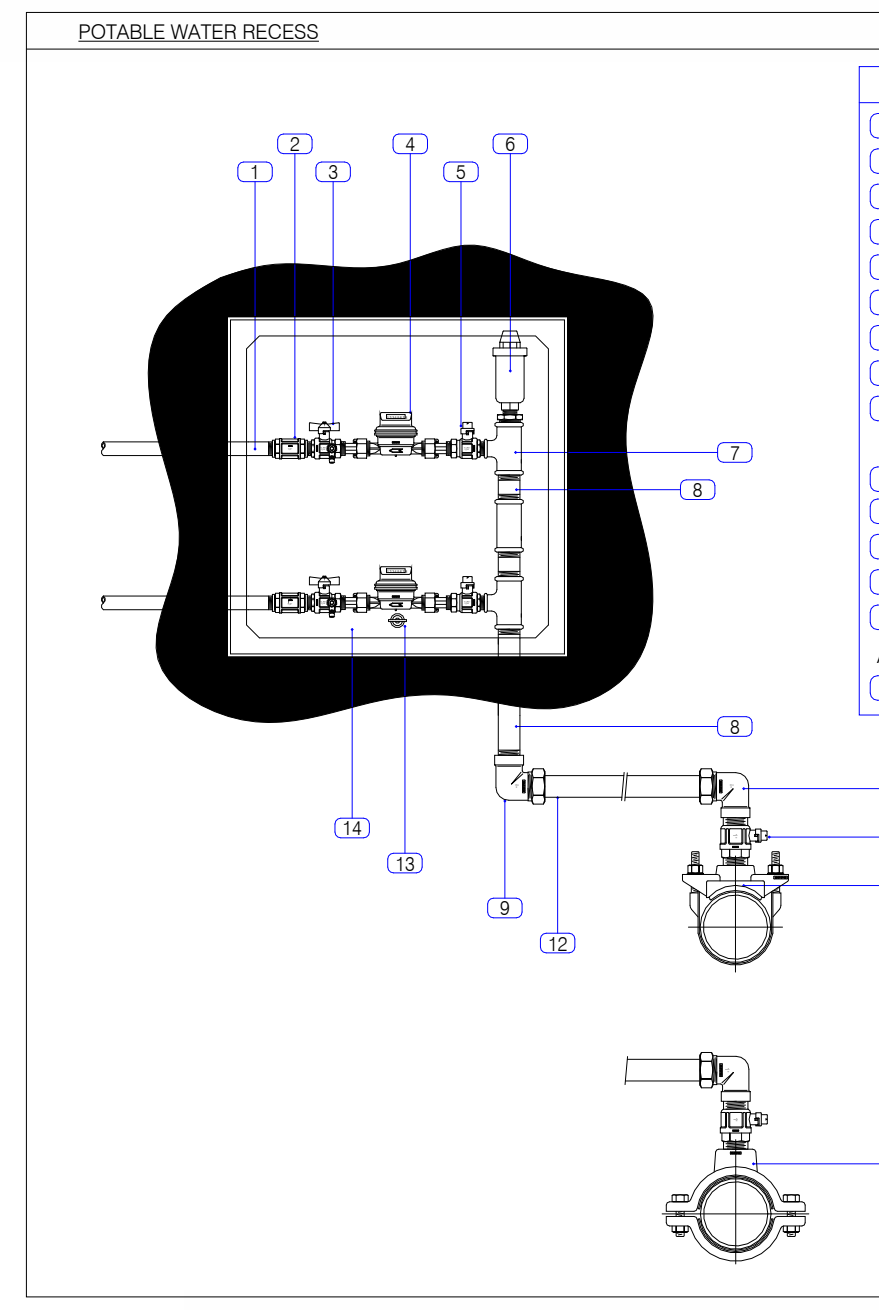
1
2
3
4
5
6
7
8
9
10
11
12
13
14
15

LEGENDA

1	GALVANIZED STEEL PIPE 1/2"
2	EUROPE CHECK VALVE 1/2"
3	BALL VALVE MALE & FEMALE 1/2"
4	FRONTAL READER
5	BALL VALVE
6	RESKO AIR VENT
7	TEE 1" - REDUCTION.1/2"
8	GALVANIZED STEEL PIPE 1"
9	POLYETHYLENE ELBOW MULTILAYER FEMALE THREAD - 32 mm x 1"
10	BALL VALVE MALE MALE 1"
11	STAINLESS STEEL CLAMP
12	POLYETHYLENE MULTILAYER PIPE 32 mm
13	TRIANGLE LOCK BOX
14	FIBERGLASS ENCLOSURE 53x53 cm
Alternately	
15	CAST IRON DOUBLE SHELL CLAMP

DETAIL FOR POTABLE FILLING WATER FOR FIREFIGHTING TANK RESERVOIR

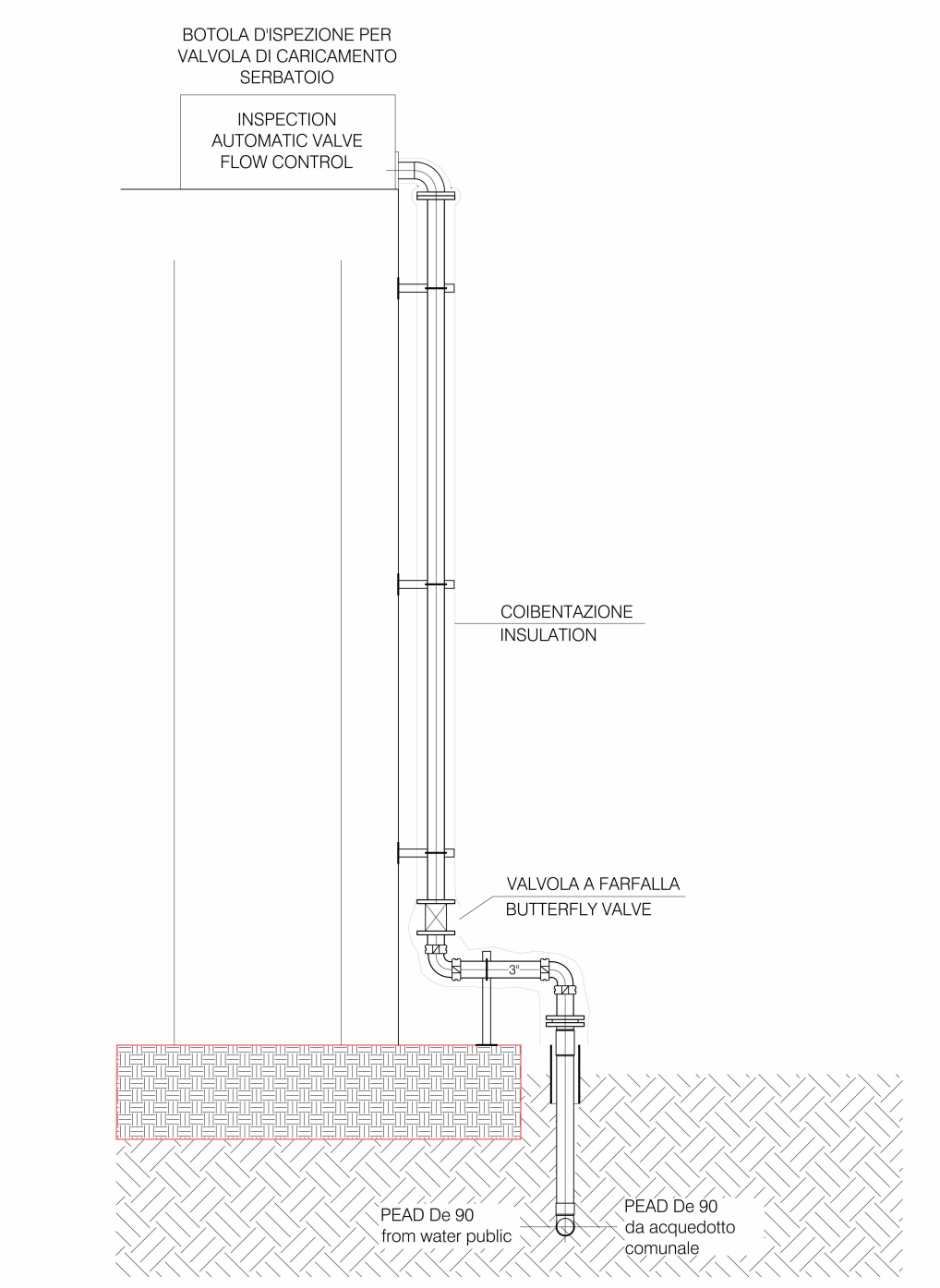
BOTOLA D'ISPEZIONE PER VALVOLA DI CARICAMENTO SERBATOIO
INSPECTION AUTOMATIC VALVE FLOW CONTROL
COIBENTAZIONE INSULATION
VALVOLA A FARFALLA BUTTERFLY VALVE
3"
PEAD De 90 from water public
PEAD De 90 da acquedotto comunale

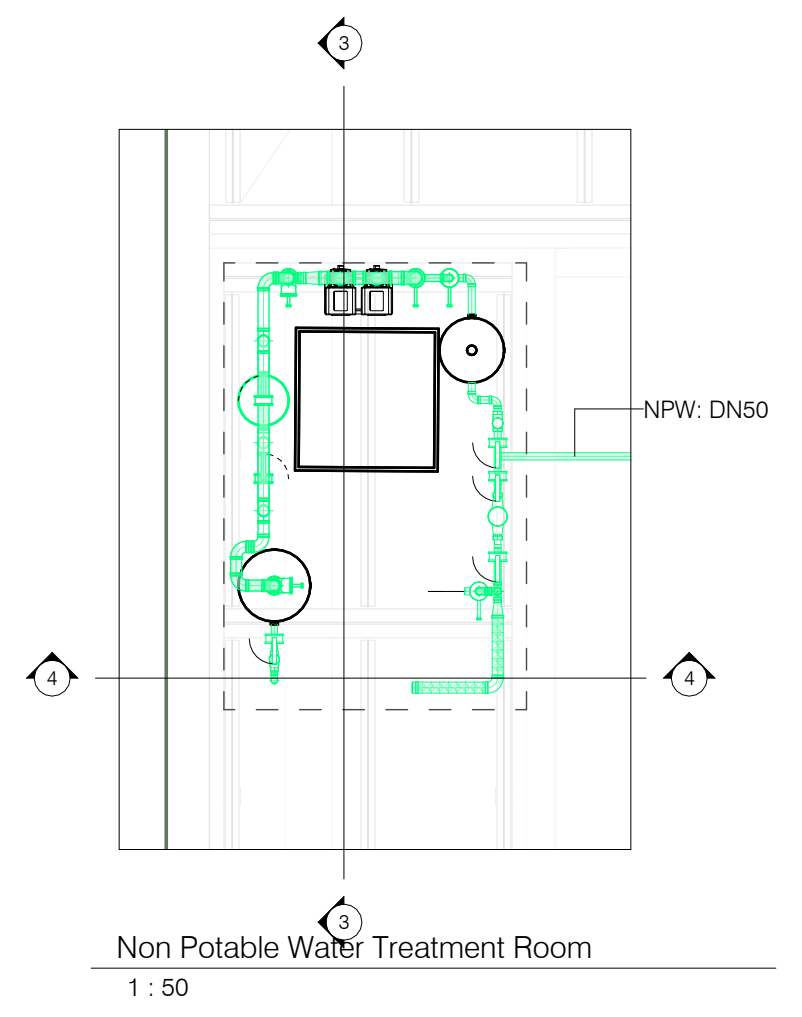

Non Potable Water Treatment Room
1 : 50

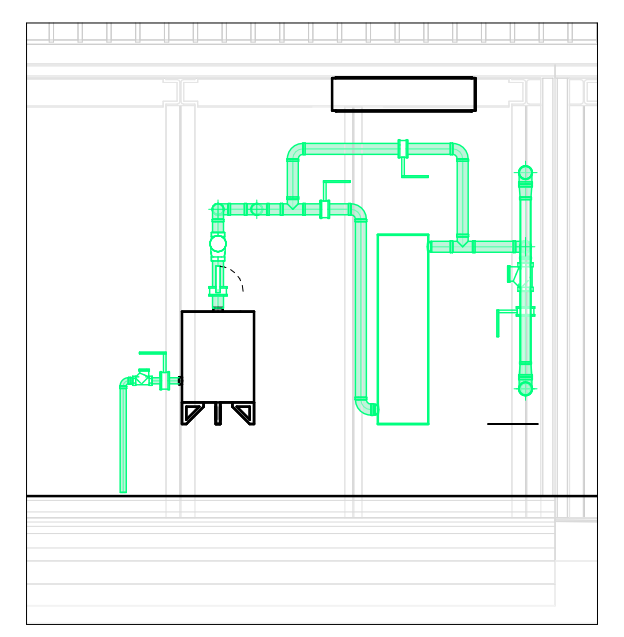

Section 3-3
1 : 50

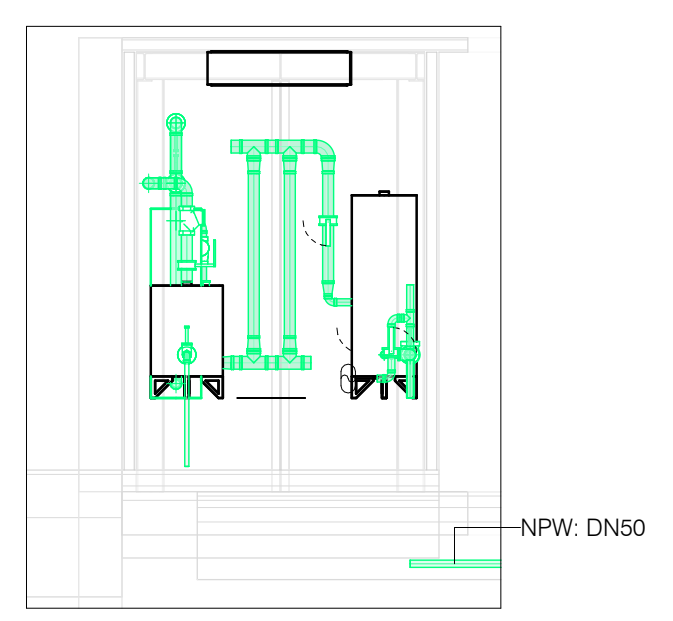

Section 4-4
1 : 50

Idrico sanitario e rete duale

Sanitary and water recovery systems

DCW	Adduzione Acqua Fredda Sanitaria *Domestic Cold Water Supply*	Pead For Underground Pipes Galvanised Steel For Outdoor Installation
NPW	Adduzione Acqua non Potabile *Non Potable Water*	Pead For Underground Pipes Galvanised Steel For Outdoor Installation

GENERAL NOTES:
- The present drawing is valid for mechanical systems object of tender only.
- Every dimension and position of materials and equipment must be verified on site by the contractor, who must promptly give notice of possible interferences.
- Possible non surveyed systems shall be preserved; whereas needed, they shall be modified and their functioning reactivated by the contractor.
- Accurate positions of equipment, materials, piping, ducts, connections to existing systems shall be defined by the contractor and submitted to the works supervisor.
- Final sizing depending on actually installed equipment and materials manufacturer.
- All equipment shall be easily maintainable and accessible through access panels or similar solutions, including where not explicitly indicated.
- The contractor shall size and certify all supports in a workmanlike manner and in respect of every prescription regarding antiseismic design.
- Constructive detail drawings necessary to the correct execution of the works shall be drafted by the manufacturer.
- Installations of elements on site shall comply with every prescription and recommendation by the producers and by the highest trade standards in the relevant fields, including acoustics and fire prevention.
- Every work considered and described, evaluated based on available documentation, shall be reevaluated and analyzed during the construction phase, after system verification following adequate survey of the existing situation.
- The contractor shall accurately check the project and give notice of any inaccuracy, incompleteness o discrepancy with any code or law.
- In case of piping or duct material change, the same pressure drop of the design material shall be guaranteed.
- All construction and coordination drawings, along with all material sheets, shall be submitted to the works supervisor for approval.
- Every infrastructure needed to deliver functioning and testable systems shall be verified on site by the contractor.
-The bottom tube measurements refer to the project Zero Level

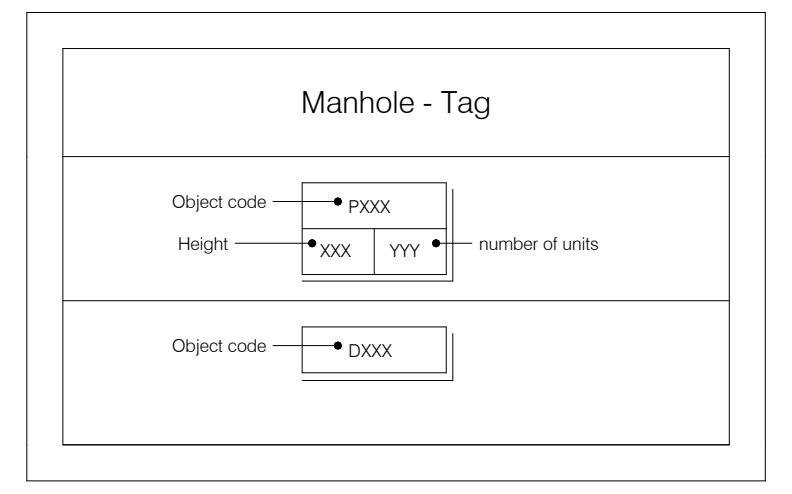
Manhole - Tag
Object code
PXXX
Height
XXX
YYY
number of units
Object code
DXXX

a External Systems finalised regarding design development
Due to phasing:
- Design development of building B & C
- Building A drawings issued to reflect

NOTE GENERALI
1. Il presente documento è valido solo per il progetto di "Disciplina".
2. Per la corretta interpretazione del disegno è necessaria la lettura congiunta di tutti gli elaborati di progetto e grafici.
3. Il dimensionamento e la redazione degli elaborati esecutivi e costruttivi finali sono a carico dell'Appaltatore, dovranno essere approvati dalla D.L.
4. Tutti i dettagli descrittivi sono contenuti nei documenti Capitolato Speciale, Relazione e Computo Metrico.
5. Qualsiasi riproduzione, uso o modifica del progetto e dei disegni è strettamente vietata a meno di autorizzazione da parte del progettista, che rimane l'autore e il proprietario morale del progetto.
6. Sarà onere dell'impresa una verifica di rispondenza con quanto contenuto nei documenti di progetto rispetto all'elaborato di L10.
7. Tutte le quote sia altimetriche che dimensionali devono essere verificate e accuratamente rilevate in sito a cura dell'appaltatore dei lavori prima dell'esecuzione dei lavori, informare immediatamente la D.L. in caso di difformità.
8. Sarà onere dell'impresa una verifica di rispondenza con quanto contenuto nei documenti di progetto rispetto al Progetto di Prevenzione Incendi. In tutti gli attraversamenti di solai o pareti che delimitano compartimenti antincendio, devono essere previste adeguate barriere tagliafiamma in modo da ripristinare la resistenza al fuoco.
9. Il progetto potrà essere oggetto di revisioni a seguito di ricezione commenti degli Enti Comunali alle pratiche amministrative.
10. Tutte le finiture e le colorazioni saranno da campionare e definire con la D.L.
11. Gli impianti meccanici ed elettrici a progetto potrebbero risultare complanari o coincidenti, non sono stati sviluppati eventuali abbassamenti di quota puntuali o spostamenti della distribuzione. In fase di progettazione costruttiva sarà necessario verificare il coordinamento interdisciplinare.
12. Alcuni Pozzetti gettati in opera sono in continuità con altre opere strutturali quali solette o fondazioni, in fase di cantiere sarà necessario dunque prevedere il coordinamento tra i vari elementi per la realizzazione di un unico getto.
13. Tutti gli staffaggi ed i tiranti rappresentati nel progetto sono a solo titolo esemplificativo. I disegni tipologico devono dunque essere utilizzati come esempio per la realizzazione dei disegni costruttivi degli staffaggi. Prima dell 'installazione in opera, l'Appaltatore dovrà sempre consegnare alla D.L., le relazioni di verifica di tenuta alle azioni sismiche.
14. La stratigrafia edile sopra i serbatoi di gasolio dei Generatori interrati dovrà essere realizzata prevedendo che gli stessi non possano essere danneggiati dall'eventuale passaggio di automezzi pesanti.
15. Il sistema fotovoltaico e di supporto dello stesso dovrà essere sviluppato dall 'appaltatore nel progetto esecutivo e costruttivo nel rispetto della relazione di calcolo fotovoltaico e dai limiti della normativa vigente.
16. Si ritiene esclusa dal presente appalto la fornitura delle disintermediate: Rack nelle Data hall e dell'infrastruttura dati ad essi connessa, i Gruppi Elettrogeni comprensivi di serbatoio interrato e di tutti i sistemi ausiliri (tubazioni di ricarica, sistema di monitoraggio delle perdite ecc); la fornitura dei Moduli prefabbricati; Chiller; Fan Wall.

GENERAL NOTES:
1. *This document is valid only for the "Subject"" project.*
2. *For the correct interpretation of the drawing, it is necessary to read all project and graphic drawings together.*
3. *The sizing and drafting of the final executive and construction drawings are the responsibility of the Contractor; they must be approved by the DP.*
4. *All descriptive details are contained in the Special Specifications, Report and Metric Computation documents.*
5. *Any reproduction, use or modification of the design and drawings is strictly prohibited unless authorized by the designer, who remains the author and moral owner of the project.*
6. *It will be the responsibility of the contractor to verify that what is contained in the design documents corresponds to the L10 drawing.*
7. *All elevations, both elevational and dimensional, shall be verified and accurately surveyed on site by the work contractor prior to execution of the work, informing the DP immediately in case of discrepancies.*
8. *It will be the contractor's responsibility to verify compliance with what is contained in the project documents against the Fire Prevention Project. In all floor or wall penetrations bordering fire compartments, adequate fire barriers shall be provided so as to restore fire resistance.*
9. *The project may be subject to revisions following receipt of comments from the Municipal Authorities to the administrative files.*
10. *All finishes and color will be to be sampled and defined with the DP.*
11. *Mechanical and electrical systems as designed may be coplanar or coincident; any punctual lowering of elevations or shifts in distribution have not been developed. Interdisciplinary coordination will need to be developed during construction design.*
12. *Some poured manholes are in continuity with other structural works such as slabs or foundations, therefore, coordination between the various elements will need to be provided at the construction site to make a single casting.*
13. *All brackets and tie-rods represented in the design are for illustrative purposes only. The type drawings should therefore be used as examples for the construction drawings of the stirrups. Prior to installation in place, the Contractor shall always deliver to the DP, the reports of verification of resistance to seismic actions.*
14. *The construction stratigraphy over the diesel tanks of the underground Generators shall be carried out providing that the same cannot be damaged by the possible passage of heavy vehicles.*
15. *The photovoltaic system and support of the same shall be developed by the contractor in the executive and construction design in compliance with the photovoltaic calculation report and from the limits of the regulations.*
16. *It is considered excluded from this contract the supply of the disintermediate: Racks in the Data halls and the data infrastructure connected to them, the Diesel Generators including underground tank and all auxiliary systems (charging pipes, leakage monitoring system, etc.); the Prefabricated Modules; Chillers; Fan Walls.*

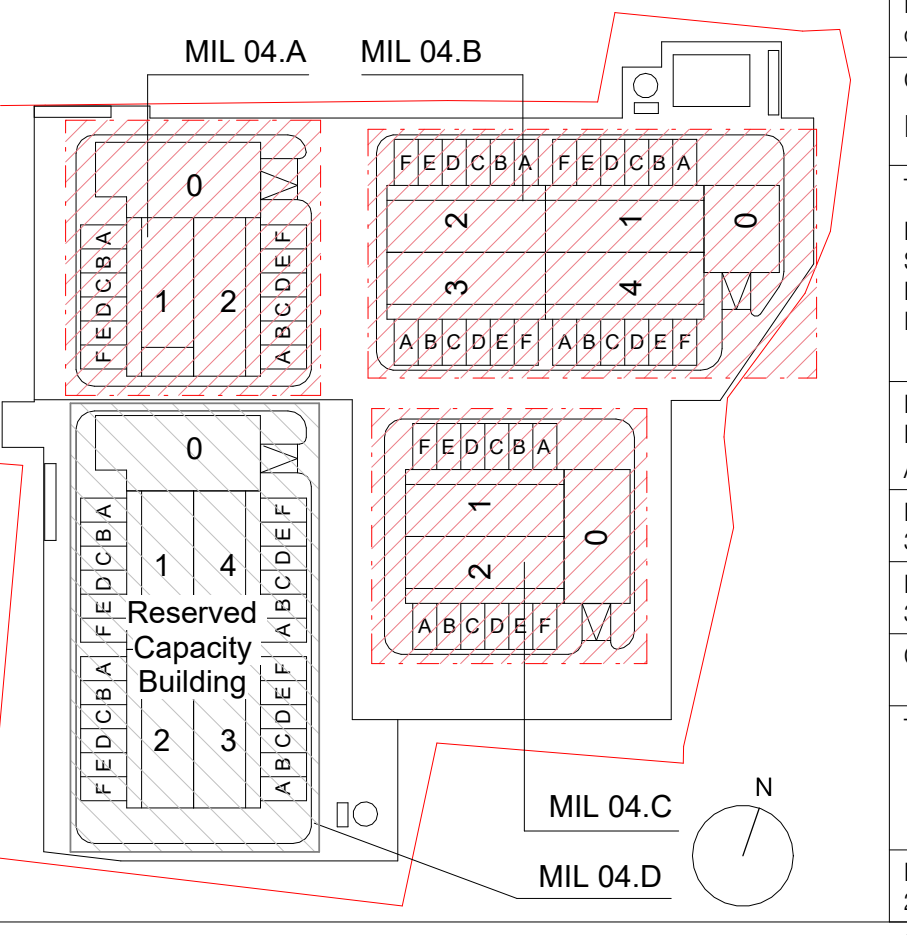
MIL 04.A
MIL 04.B
MIL 04.C
MIL 04.D
0
1
2
3
4
A
B
C
D
E
F
Reserved Capacity Building
N

REV	DATA / DATE:	DESCRIZIONE / DESCRIPTION:
-	31/08/2023	First Emission
a	27/10/2023	Revision a

PROGETTISTA / DESIGNER:

L22 è una divisione di:
Lombardini22 S.p.A.
Via Lombardini 22 20143 Milano, Italia
T +39 02 36 59 62 00 F +39 02 83 20 13 97
info@l22.it www.l22.it

Black & White Engineering:
69 Wilson Street London, EC2A 2BB
United Kingdom
www.bw-engineering.com

STRUTTURE:

Ing. Arturo Donadio
S.P.S. S.r.l. www.spssrl-mi.it
Via M. Gioia, 64 - 20125 Milano, Italia
segreteria@spssrl-mi.it T. 02/6694887

COMMITTENTE / CLIENT:

INFRASTRUCTURE ITALIA LAND 4 S.r.l.
Via del Bosco Rinnovato, 6 Palazzo U4 20090 Assago (MI)

PROGETTO / PROJECT:
MIL 04
Alzaia Naviglio Pavese snc,
Vellezzo Bellini (PV)

PROGETTISTA / DESIGNER:
Ing. Roberto Cereda - Iscritto all'Ordine degli Ing. di Brescia n°N.2609

OGGETTO / OBJECT:
RIBA4 - MIL 04

TITOLO / DESCRIPTION:
Mechanical Systems
Sanitary and water recovery systems
External Area
Idrico sanitario e rete duale - Aree esterne

DISEGNATO DA: DRAWN BY: AGA	CONTROLLATO DA: CHECKED BY: MIC
DATA/ DATE: 31/08/2023	SCALA / SCALE: 1:350
NOME FILE / FILE NAME: 3604_EM-4101aG	
COMMESSA / JOB: 3604	FORMATO / SHEET: A0+++
TAVOLA / DRAWING: EM-4101	
DATA REV.: 27/10/2023	REV.: a

© Lombardini22 S.p.A. ES DT (rev.-) (L.663/41 Art.2575)